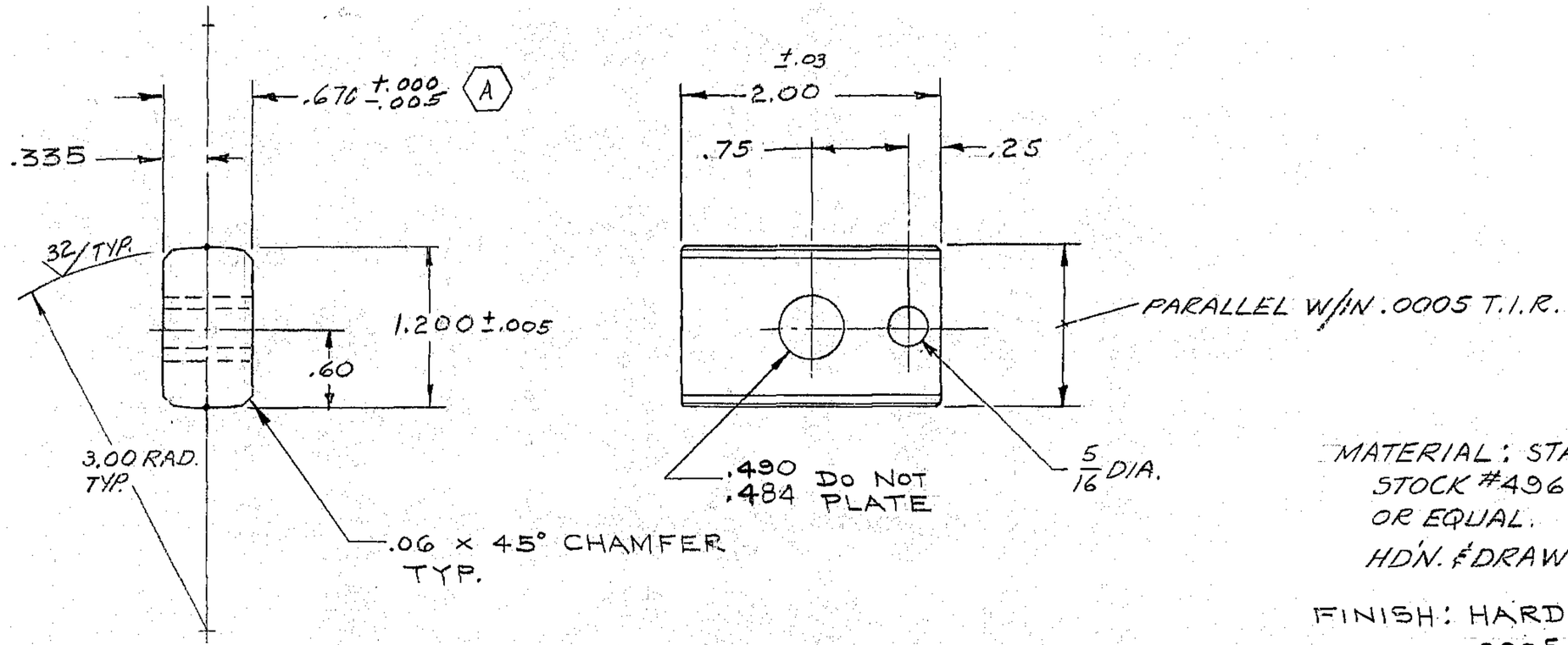

MATERIAL: STARRETT GROUND STOCK #496 (OIL HARDENING) OR EQUAL.
HD'N. & DRAW TO Rc 58/60

FINISH: HARD CHROME .0005 – .0010 THICK EXCEPT AS NOTED

ITEM #9

FOR ASSEMBLY SEE 2150.262-E002 & 2150.262-E102

LET.	REVISION ON	ECR	DATE	BY
B	REVISED AS BUILT	0529	8-17-70	L.B. D.L.B.
A	.670 +.000 -.005 WAS 11/16 STOCK	0437	2-16-70	A.R.

TOLERANCES UNLESS OTHERWISE NOTED
DECIMAL DIMENSIONS 00.00 ± .010 00.000 ± .003
FRACTIONAL DIMENSIONS UP TO 18" ± 1/64 18" TO 50" ± 1/32 50" & OVER ± 1/16
BREAK SHARP EDGES .02
ALL SURFACES TO HAVE 125√ FINISH UNLESS OTHERWISE NOTED.

KITT PEAK NATIONAL OBSERVATORY
OPERATED BY THE ASSOCIATION OF UNIVERSITIES FOR RESEARCH IN ASTRONOMY, INC.
UNDER CONTRACT WITH NATIONAL SCIENCE FOUNDATION

150 IN. STELLAR TELESCOPE — REF. FILE 1173
NAME ANCHOR PIVOT PRIMARY MIRROR EDGE SUPT.
SCALE FULL
PRINT ISSUED

DES'D BY	DATE	APP'D BY	DATE
[signature]	10-9-69	[signature]	10-23-69
DRN BY [signature]	DATE 10-9-69	APP'D BY ZKR	DATE 11/24/69
CH'KD BY [signature]	DATE 11-17-69	APP'D BY J.W.	DATE 10-15-69

DRAWING NUMBER 2150.262-B021 — REV. B

(A)

10/68 DIETERICH-POST CLEARPRINT 1020