BILL OF MATERIAL

ITEM	QTY.	MATERIAL	DESCRIPTION	WEIGHT
1	1	2150.261-E003	CENTER SUPPORT - PRIMARY MIRROR SUPPORT SYSTEM	
2	4	2150.261-C102	RADIAL DEFINING UNIT ASSY. (PRIMARY MIRROR)	
3	12	STAINLESS STEEL	5/16 - 18 x 1" LG. SOC. HD. CAP SCREW	
4	1	" "	1/2" DIA x 1 1/2" LG. DOWEL	

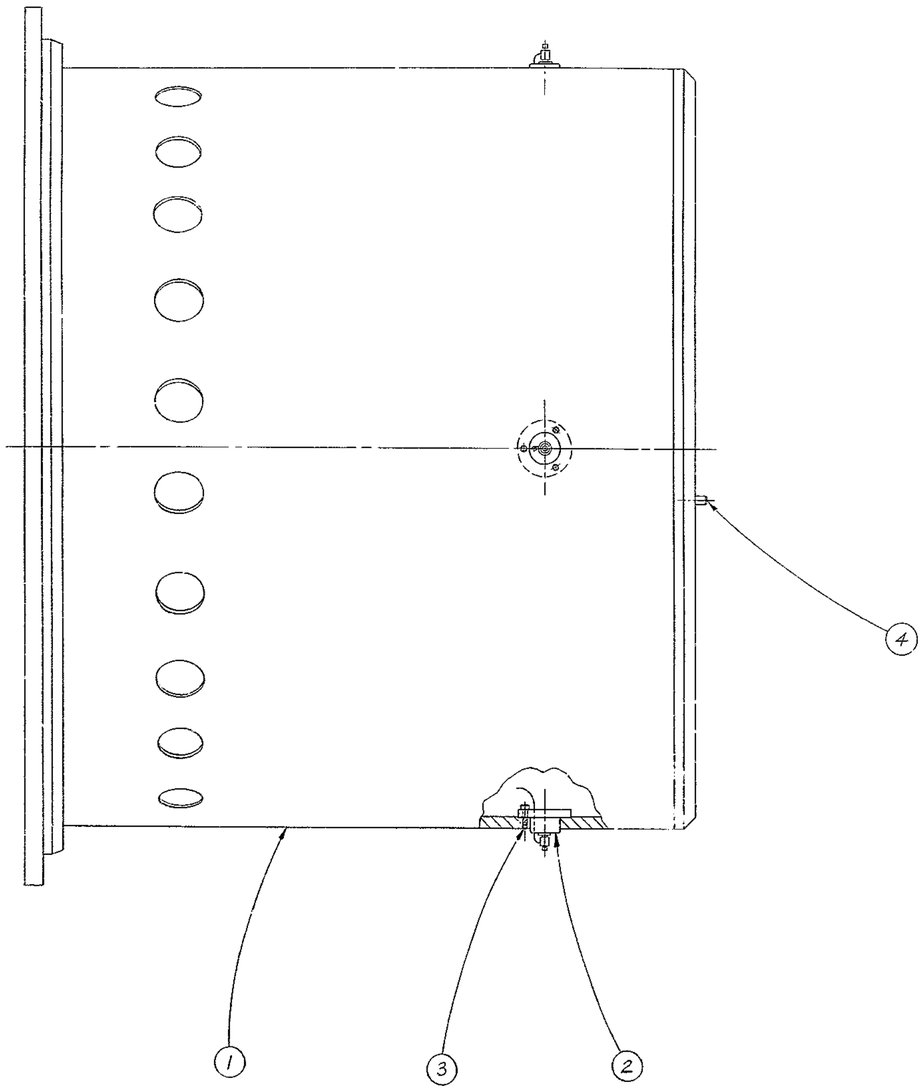

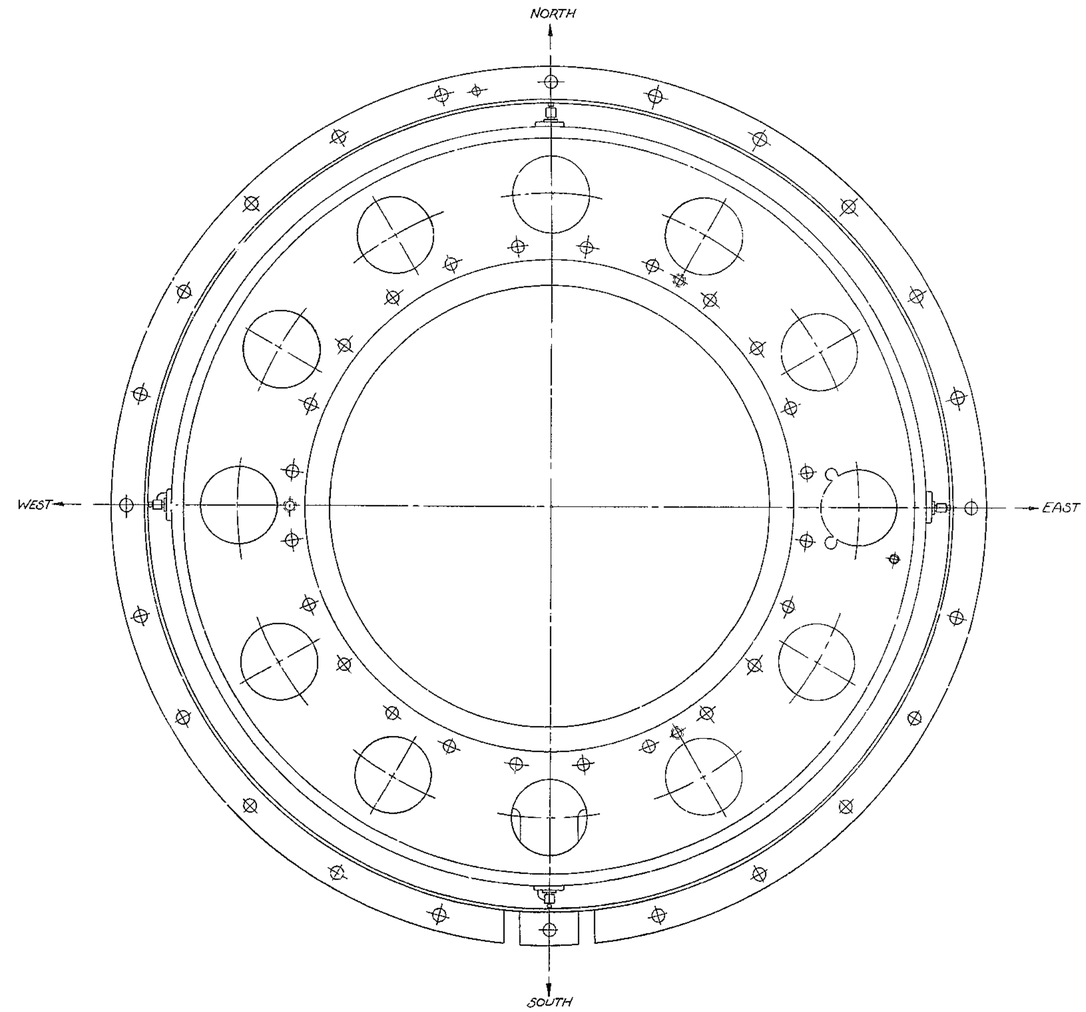

NOTE:
ITEM 2 (2150.261-C102) MUST BE REMOVED WHEN ASSEMBLING AND REMOVING ITEM 1 (2150.261-E003) FROM TELESCOPE - SEE DWG.

EST. WT. = 3550 LBS.

1172

FOR ASSEMBLY SEE

LET.	REVISION	ECR	DATE	BY
D	TITLE WAS CENTER SECT	0429	1/30/70	[illegible]
	ASSY-PRIMARY MIRROR SUPPORT SYSTEM			
C	REVISED & REDRAWN FROM [illegible] 2150.261-E002	0392	12-9-69	RIN [illegible]

TOLERANCES UNLESS OTHERWISE NOTED.
DECIMAL DIMENSIONS 00.00 ± .010 00.000 ± .003
FRACTIONAL DIMENSIONS UP TO 18" ± 1/64 18" TO 50" ± 1/32 50" & OVER ± 1/16
BREAK SHARP EDGES
ALL SURFACES TO HAVE 125 FINISH UNLESS OTHERWISE NOTED.

KITT PEAK NATIONAL OBSERVATORY
OPERATED BY THE ASSOCIATION OF UNIVERSITIES FOR RESEARCH IN ASTRONOMY, INC. UNDER CONTRACT WITH NATIONAL SCIENCE FOUNDATION

150 IN. STELLAR TELESCOPE

NAME: COUDE #3 LOWER SUPPORT & PRIMARY DEFINING UNIT - ASSEMBLY

SCALE: QUARTER
PRINT ISSUED

DESIGNED BY [illegible]	DATE 11-2-67	APPROVED BY [illegible]	DATE [illegible]
DRAWN BY G. FORD	DATE 11-2-67	APPROVED BY [illegible]	DATE [illegible]
CHECKED BY [illegible]	DATE 12-10-69	APPROVED BY	DATE

DRAWING NUMBER 2150.261-E002 REV. D

9/69 DIETZGEN-POST CLEARPRINT 1020