BILL OF MATERIAL

ITEM	QTY.	MATERIAL	DESCRIPTION	WEIGHT
1	3	2150.261-B108	SHEAR PIN	
2	1	2150.261-C103	BODY HOLDER	
3	1	2150.261-B104	BODY	
4	1	2150.261-B105	ADJUSTING CELL MOUNT	
5	1	2150.261-B106	DEFINING STEM	
6	1	2150.261-B107	STEM GUIDE	
7	1	COMM'L.	LOAD CELL - HOUSTON SCIENTIFIC MODEL # 3500-10	
8	1	COMM'L.	#8-32 HEX. NUT STEEL	
9	1	COMM'L.	#8 FLAT WASHER STEEL	
10	1	COMM'L.	LEE COMPRESSION SPRING .240 O.D. x 3/4 LG. # LC-032C8	

(A)

QUANITIES SHOWN IS FOR 1-UNIT ONLY
4-UNITS REQ'D. PER TELESCOPE.

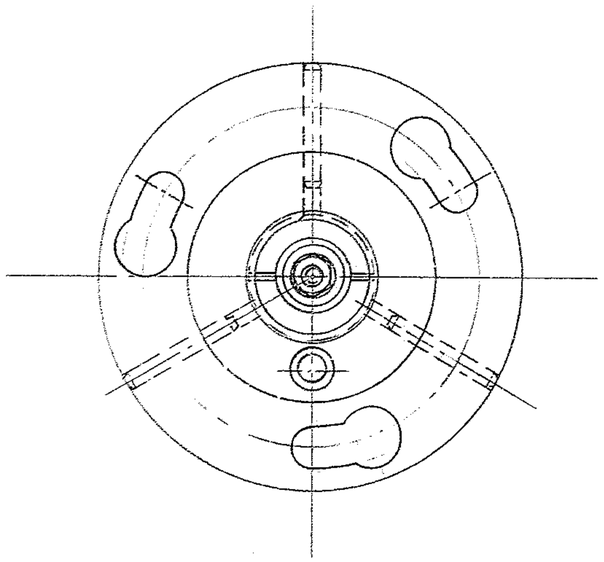

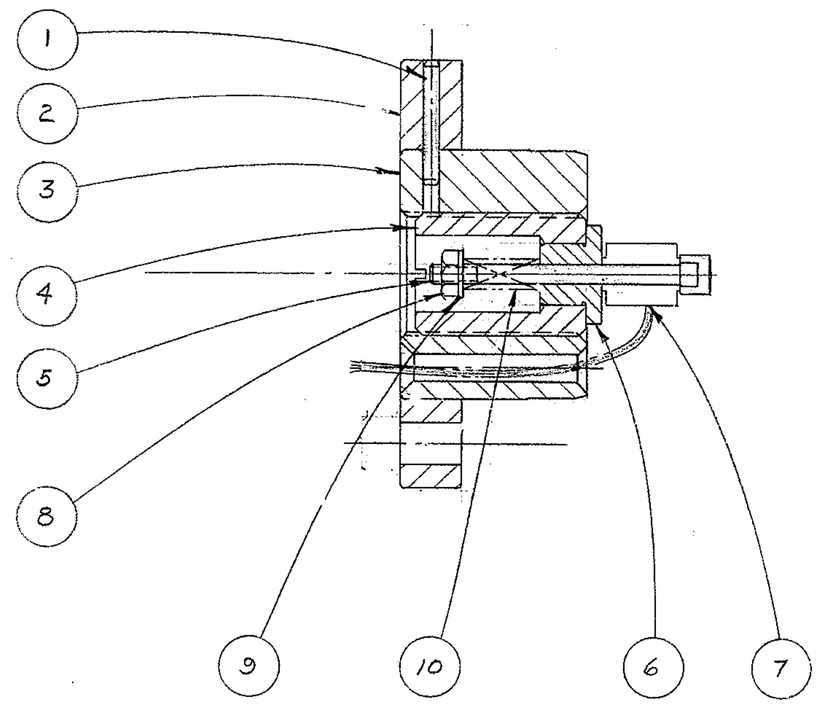

FOR ASSEMBLY SEE 2150.261-E002

LET.	REVISION	ECR	DATE	BY
A	ITEM 7 - WAS LOCKHEED ELEC. CO-SERIES 1500	0429	1/30/70	[illegible]

TOLERANCES UNLESS OTHERWISE NOTED
DECIMAL DIMENSIONS
00.00 ± .010
00.000 ± .003
FRACTIONAL DIMENSIONS
UP TO 18" ± 1/64
18" TO 50" ± 1/32
50" & OVER ± 1/16
BREAK SHARP EDGES
ALL SURFACES TO HAVE 125 √ FINISH UNLESS OTHERWISE NOTED.

KITT PEAK NATIONAL OBSERVATORY
OPERATED BY THE
ASSOCIATION OF UNIVERSITIES FOR RESEARCH IN ASTRONOMY, INC.
UNDER CONTRACT WITH
NATIONAL SCIENCE FOUNDATION

150 IN. STELLAR TELESCOPE — REF. FILE 1172

NAME: RADIAL DEFINING UNIT ASS'Y. (PRIMARY MIRROR)

SCALE: FULL

PRINT ISSUED

DESIGNED BY	DATE	APPROVED BY	DATE
[illegible]	10-27-69	[illegible]	28 Oct 69
DRAWN BY	DATE	APPROVED BY	DATE
[illegible]	10-27-69	[illegible]	12-9-69
CHECKED BY	DATE	APPROVED BY	DATE
[illegible]	11-3-69	[illegible]	10-29-69

DRAWING NUMBER: 2150.261-C102 — REV. A

(A)

4/69 DIETERICH-POST CLEARPRINT 1020