REVISIONS				
ZONE	LTR	DESCRIPTION	DATE	APPROVED
	A	REVISED PER AURA APPD PRINT	[illegible]	
C4	B	ADDED ITEMS 15 & 16 & TAPPING NOTE	5-10-71	JW
C7	C	[illegible]	[illegible]	[illegible]
	D	DELETED ITEM 17 ADDED ITEMS [illegible]	[illegible]	[illegible]

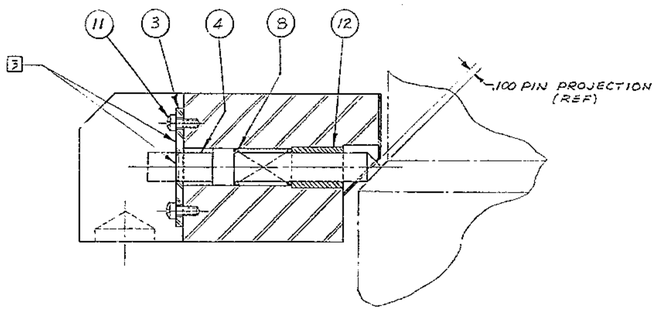

SECTION B-B
SCALE - FULL

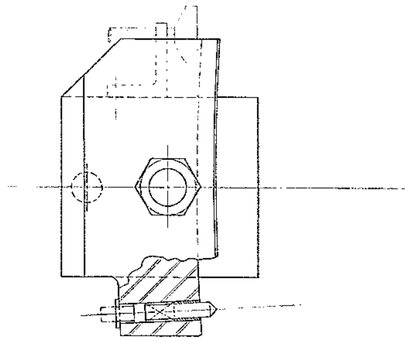

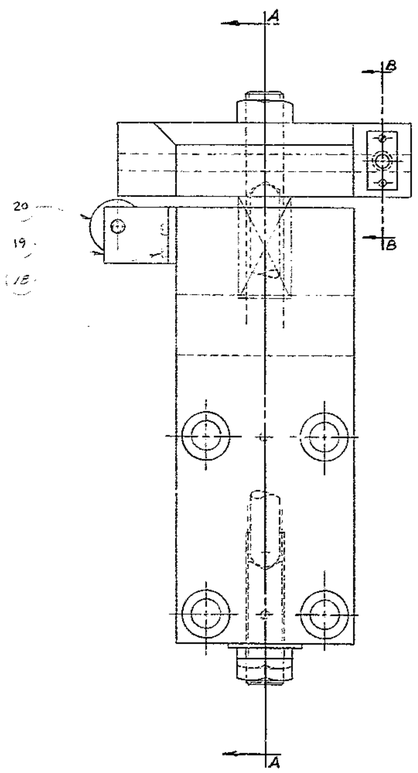

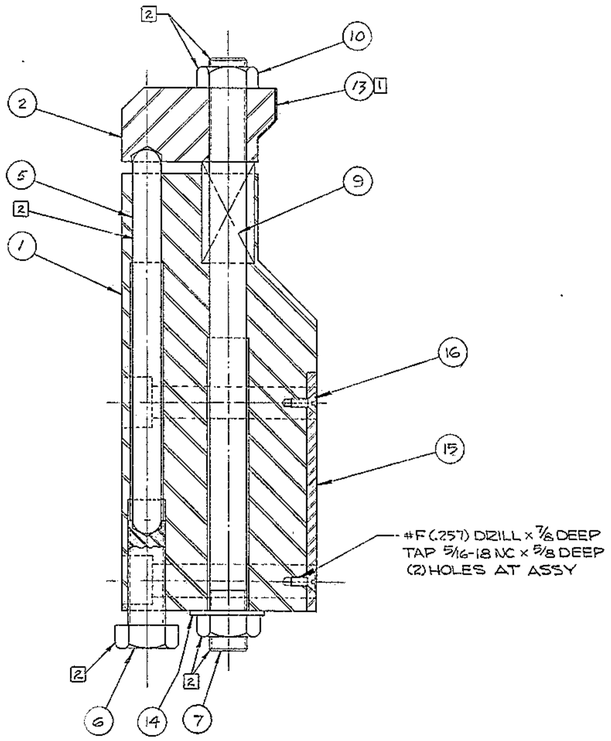

SECTION A-A

NOTE

1. SEE 2150.260D304 FOR SPECIAL BONDING INSTRUCTIONS.
2. APPLY SECOND COAT PRIME PAINT & TWO (2) COATS OF FINISH ENAMEL PER WGC SPEC #511 EXCEPT SURFACES WHERE NOTED 2.
3. WITH INDICATOR PIN PROJECTING .100 AS SHOWN IN SECTION "B-B", END SHALL BE FLUSH WITH RETAINER. GRIND PIN AS NECESSARY AT ASSEMBLY.

SEE B/M 2150.260A302 (WGC-114525)
NEXT ASSY 2150.260E002 (WGN 103561)

1171

FIND NO.	PART NO.	DESCRIPTION	QTY	MATERIAL	CODE IDENT

LIST OF MATERIAL (LM)

LIMITS ON MACHINED DIMENSIONS EXCEPT AS NOTED
ANGULAR = ± 1° 0'
LINEAR:
X = ± .1 XXX = ± .010
XX = ± .03 FRACTIONAL = ± 1/32
BREAK ALL SHARP EDGES
MATERIAL

150" STELLAR TELESCOPE MTG.

DRAWN J. White 4-24-69
CHECK [illegible]
ENGR

WGN 103570
APPROVED

WESTERN GEAR CORPORATION
HEAVY MACHINERY DIVISION
EVERETT, WASHINGTON

PRIMARY MIRROR
CLAMP BLOCK ASSEMBLY

SIZE E | CODE IDENT NO. 16603 | 2150.260E302 | REV D

SCALE [illegible] | WT 183 LB | SHEET 1 OF 1

WESTERN GEAR CORPORATION
CONSTRUCTION PROCESS DEPARTMENT
APPROVED FOR PROCUREMENT
CR DATE 4/21/69