REVISIONS				
ZONE	LTR	DESCRIPTION	DATE	APPROVED
	A	REVISED PER AURA APPROVED PRINT	1 OCT 68	

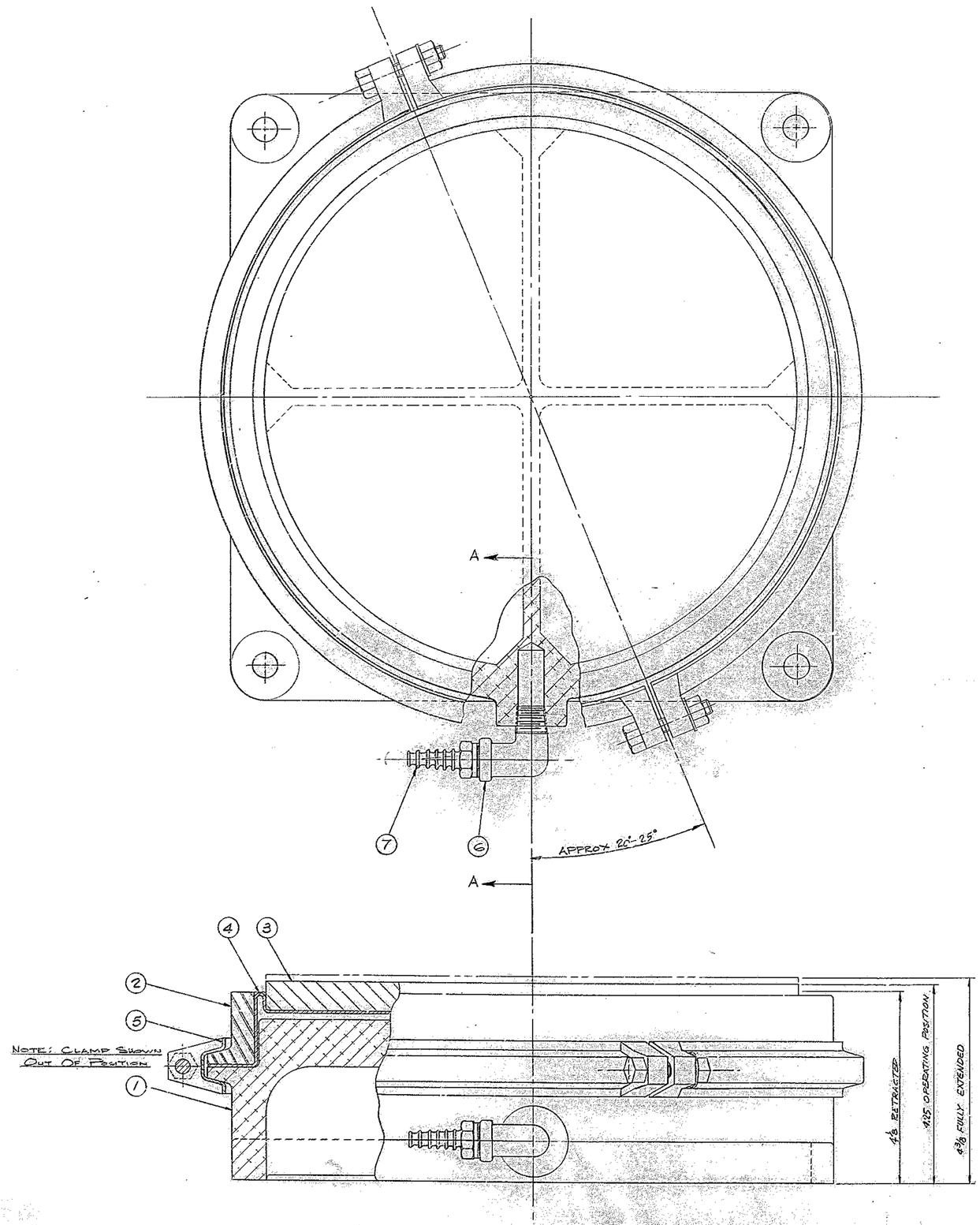

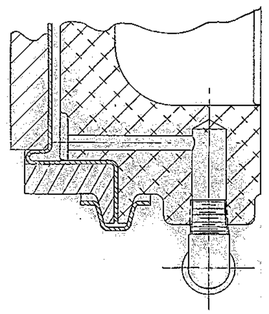

SECTION A-A

NOTES:
1. ALL INTERIOR AREAS AND PASSAGES TO BE THOROUGHLY CLEANED BEFORE ASSEMBLY.
2. SEAL OFF AIR HOSE INLET UNTIL INSTALLATION IN TELESCOPE.
3. DO NOT PAINT THIS ASSEMBLY OR ANY PARTS OF IT.

NEXT ASSY 2150.260E002 (WGN103561)

REF. FILE 11.71

FIND NO.	PART NO.	DESCRIPTION	QTY	MATERIAL	CODE IDENT

LIST OF MATERIAL (LM)

WESTERN GEAR CORPORATION
CONSTRUCTION PROJECTS DEPARTMENT
APPROVED FOR PROCUREMENT
G.R. DATE 10/17/69

LIMITS ON MACHINED DIMENSIONS EXCEPT AS NOTED
ANGULAR = ± 1° 0'
LINEAR:
.X = ± .1 .XXX = ± .010
.XX = ± .03 FRACTIONAL = ± 1/32
BREAK ALL SHARP EDGES
MATERIAL
SEE PL C114519

150" STELLAR TELESCOPE MTG.

DRAWN	D.K. FRIEND	5-8-69
CHECK	[illegible]	5-26-69
ENGR		

WGN103566
APPROVED

WESTERN GEAR CORPORATION
HEAVY MACHINERY DIVISION
EVERETT, WASHINGTON

BACK SUPPORT AIR PAD
PRIMARY MIRROR CELL ASSY

SIZE	CODE IDENT NO.		REV
E	16603	2150.260E102	A

SCALE FULL WT 53 1/2 LB SHEET 1 OF 1