NOTES: UNLESS OTHERWISE NOTED

~~1. REMOVE ALL BURRS AND SHARP EDGES ═══ R MAX~~

~~2. MACHINED SURFACE ROUGHNESS 125√~~

REVISIONS						
ZONE	LTR	DESCRIPTION	ECR	DATE	BY	APVD
	B	REVISED & REDRAWN	1239	2-6-73	L.L.	

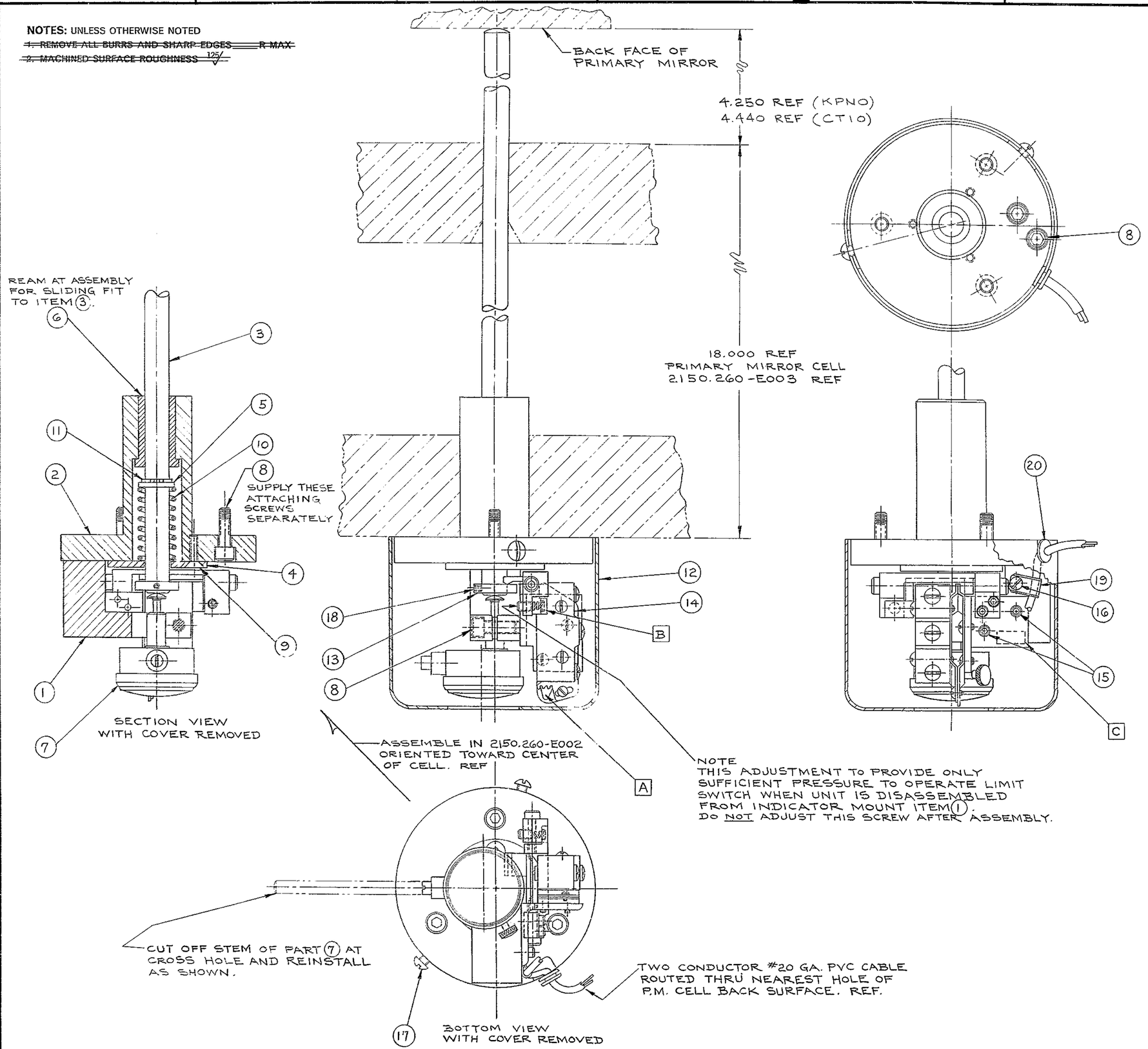

SHOW LIMIT SWITCH DESIGNATIONS ON ITEM 14 AT POSITION MARKED C AND ORIENTED AS SHOWN.

LOCATION	DEVICE DESIGNATION
NORTH	1H LS21
SOUTHWEST	1H LS22
SOUTHEAST	1H LS23

SET LIMIT SWITCHES AFTER INSTALLATION OF ASSEMBLY IN THE P.M. CELL AS FOLLOWS.

1. ASSURE INDICATOR ROD ITEM 3 IS OPERATING FREELY WITH NO BINDING.
2. WITH INDICATOR ROD ITEM 3 IN CONTACT WITH MIRROR AND SUPPORT SYSTEM IN OPERATION.
   - A. SET ACTUATING COLLAR ITEM 13 TO APPROACH LIMIT SWITCH ACTUATION.
   - B. FINE ADJUST AT A TO SET LIMIT SWITCHES TO BE .001 TO .003 PRIOR TO ACTUATION.
   - C. CHECK OUT SYSTEM, ATTACH ELECTRICAL WIRING, OPERATE EACH LIMIT SWITCH BY ROCKING LEVER AT B TO PROOF TEST.

FOR BILL OF MATERIAL SEE DWG 2150.260-A402

QTY REQD	PART OR IDENTIFYING NO.	DESCRIPTION	MATERIAL/SPECIFICATION	ITEM NO.

PARTS LIST

TOLERANCES UNLESS OTHERWISE NOTED
DECIMALS .XX ± .03 .XXX ± .010
FRACTIONS ± ═
ANGULAR ± 0° 30'

NEXT ASSEMBLY 2150.260-E002

150 INCH STELLAR TELESCOPE

KITT PEAK NATIONAL OBSERVATORY
OPERATED BY THE ASSOCIATION OF UNIVERSITIES FOR RESEARCH IN ASTRONOMY, INC. UNDER CONTRACT WITH NATIONAL SCIENCE FOUNDATION

NAME: P.M. AXIAL POSITION INDICATOR ASSEMBLY PRIMARY MIRROR CELL ASSY.

REF. FILE 1171

SCALE: FULL

PRINT ISSUED

	DATE		DATE		
DESIGNED BY		APPROVED BY G.R.	10/17/69	DWG NO. 2150.260-D402	REV B
DRAWN BY J. WHITE	5-8-69	APPROVED BY	DATE		
CHECKED BY A. DEMPKE	5/21/69	APPROVED BY	DATE	RELEASE DATE 8-9-74	

8/72 DIETERICH-POST CLEARPRINT 1220