REVISIONS				
ZONE	LTR	DESCRIPTION	DATE	APPROVED
	A	REVISED PER AURA APPD PRINT	21 Oct 69	

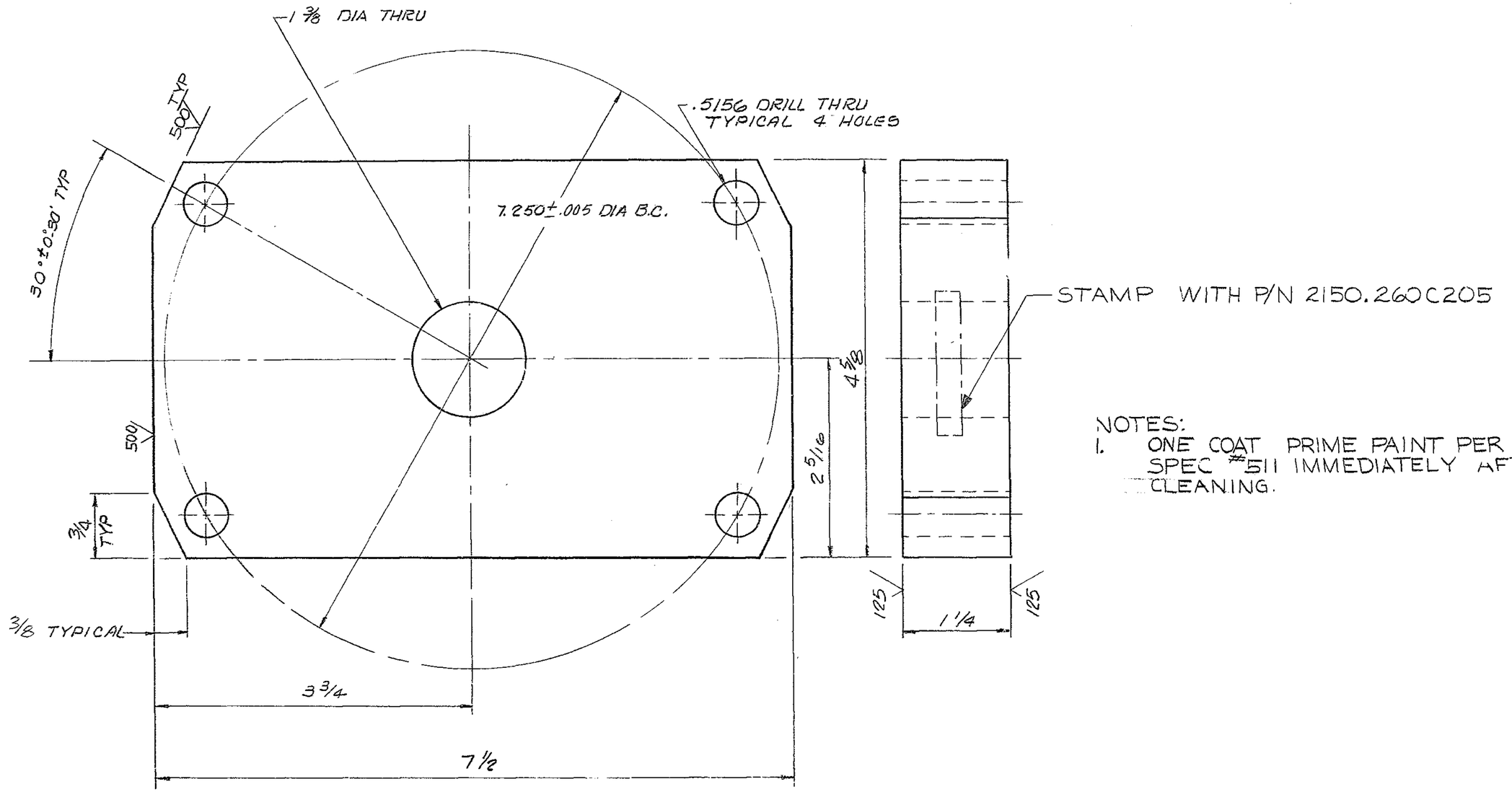

NOTES:
1. ONE COAT PRIME PAINT PER WGC SPEC #511 IMMEDIATELY AFTER CLEANING.

NEXT ASSY 2150.260 E202 (W.G.N 103572)

1171

FIND NO.	PART NO.	DESCRIPTION	QTY	MATERIAL	CODE IDENT

LIST OF MATERIAL (LM)

LIMITS ON MACHINED DIMENSIONS EXCEPT AS NOTED
ANGULAR = ± 1° 0'
LINEAR:
.X = ± .1 .XXX = ± .010
.XX = ± .03 FRACTIONAL = ± 1/32

BREAK ALL SHARP EDGES

MATERIAL
C1018 OR EQUIV
1 1/2 x 5 x 7 1/2

150" STELLAR TELESCOPE MTG

DRAWN D.K. FRIEND 5-16-69
CHECK S. Sanders 5-22-69
ENGR

W.G.D 108793

APPROVED

western GEAR CORPORATION
HEAVY MACHINERY DIVISION
EVERETT, WASHINGTON

PIVOT BLOCK-DEFINING UNIT-BACK SUPPORT

SIZE	CODE IDENT NO.		REV
C	16603	2150.260C205	A

SCALE FULL WT 12 1/2 LB SHEET 1 OF 1

WESTERN GEAR CORPORATION
CONSTRUCTION PROJECTS DEPARTMENT
APPROVED FOR PROCUREMENT
GR DATE 10/23/63

P1336