THIS DOCUMENT CONTAINS INFORMATION PROPRIETARY TO WESTERN GEAR CORPORATION. ALL DESIGN, MANUFACTURING, REPRODUCTION, USE, PATENT, AND SALES RIGHTS REGARDING THE SAME ARE HEREBY EXPRESSLY RESERVED BY WESTERN GEAR CORPORATION. THIS DOCUMENT IS SUBMITTED FOR REFERENCE PURPOSES ONLY AND SHALL NOT BE DISCLOSED TO ANY UNAUTHORIZED PERSON OR INCORPORATED INTO ANY OTHER PROJECT.

REVISIONS

ZONE	LTR	DESCRIPTION	DATE	APPROVED
	A	REVISED PER ALRA APPD PRINT	22 Oct 69	
B-A	B	ADD. DIMS. "3/8" & "7/8".	3-31-70	
B-A	C	3/16 WAS 3/8	4-22-70	

WESTERN GEAR CORPORATION
CONSTRUCTION PROJECTS
DEPARTMENT
APPROVED FOR
PROCUREMENT
GR DATE 10/23/69

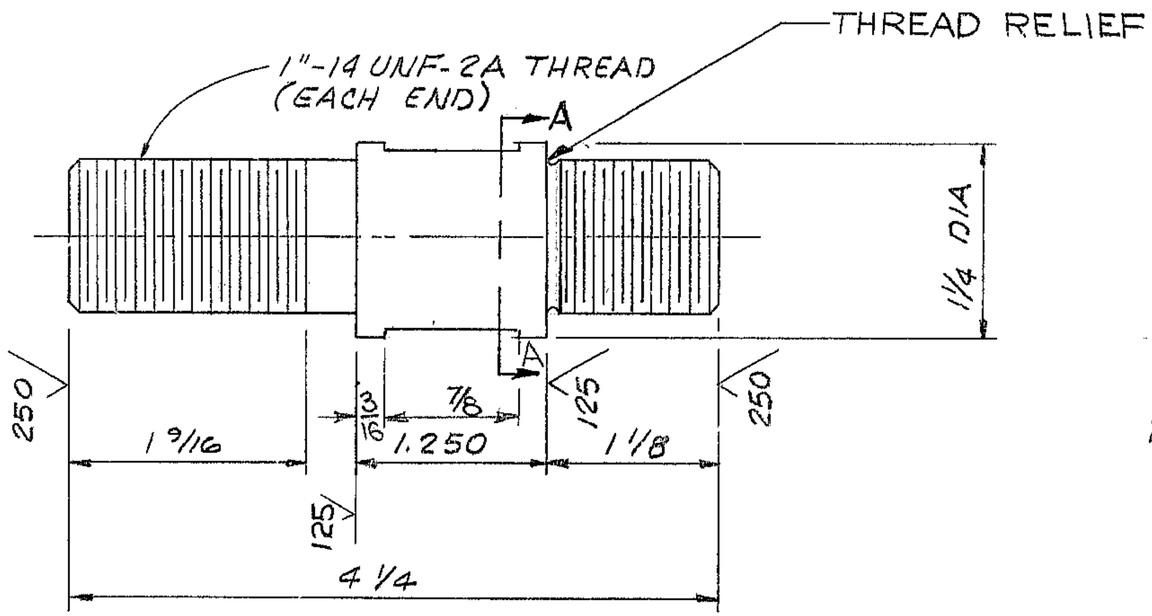

NOTE:
1. MATL - C-1042 C.F. ROUND, 1 1/4 DIA X 4 1/4 LONG.
2. TAG WITH P/N 2150.260B209.

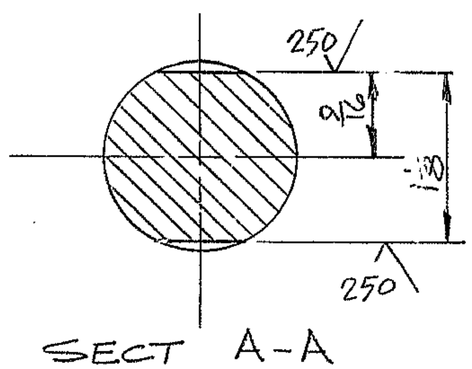

REF. FILE 1171

NEXT ASSY 2150.260E202 (WGN103572).

LIMITS ON MACHINED DIMENSIONS EXCEPT AS NOTED ANGULAR ± 1° 0' LINEAR .X = ± .1 .XX = ± .03 .XXX = ± .010 FRACTIONAL ± 1/32 BREAK ALL SHARP EDGES	150" STELLAR TELESCOPE MTG DRAWN D.K. FRIEND 5/14/69 CHECK S. Sanders 5/23/69 ENGR WGC114532 APPROVED	western GEAR CORPORATION — HEAVY MACHINERY DIVISION, EVERETT, WASHINGTON STUD-DEFINING UNIT BACK SUPPORT SIZE B — CODE IDENT NO. 16603 — 2150.260B209 — REV C SCALE FULL — WT. 1 1/2 LB — SHEET 1 OF 1

P1335

5-15-69 327