THIS DOCUMENT CONTAINS INFORMATION PROPRIETARY TO WESTERN GEAR CORPORATION. ALL DESIGN, MANUFACTURING, REPRODUCTION, USE, PATENT, AND SALES RIGHTS REGARDING THE SAME ARE HEREBY EXPRESSLY RESERVED BY WESTERN GEAR CORPORATION. THIS DOCUMENT IS SUBMITTED FOR REFERENCE PURPOSES ONLY AND SHALL NOT BE DISCLOSED TO ANY UNAUTHORIZED PERSON OR INCORPORATED INTO ANY OTHER PROJECT.

REVISIONS				
ZONE	LTR	DESCRIPTION	DATE	APPROVED
	A	REVISED PER AURA REV. DTD. 4-3-69	5-8-69	
5D	B	1 1/16 DRILL WAS 31/32 PILOT DRILL.	3-3-70	
B-6	C	ADDED "SLOT HOLES ....."	3/28/73	LDS

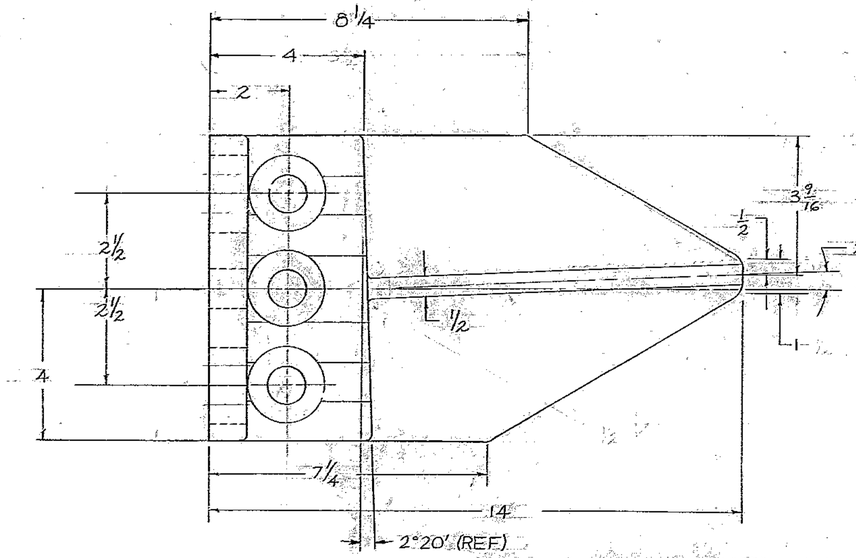

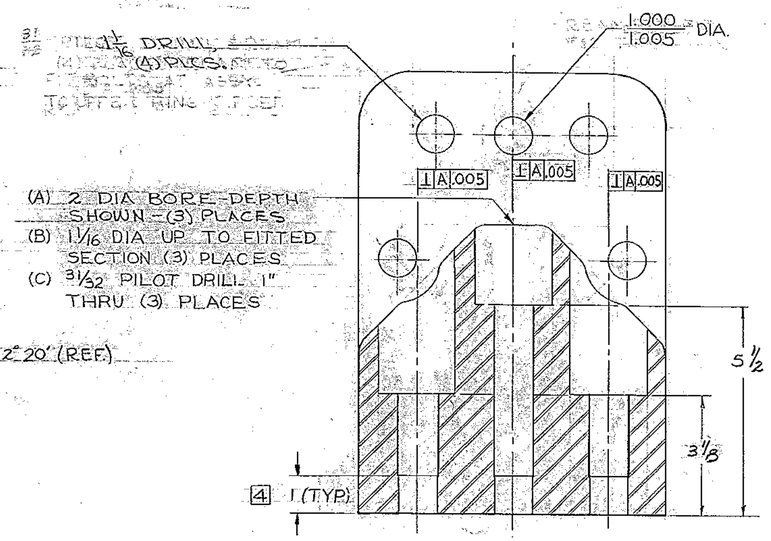

SECTION A-A

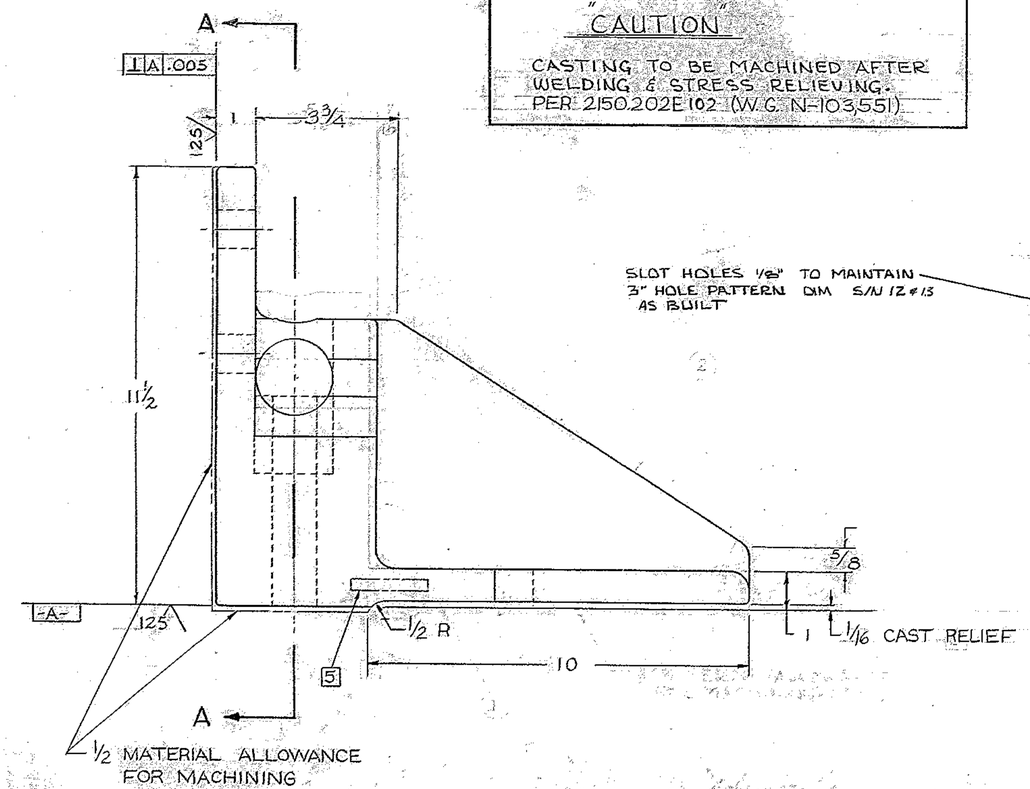

"CAUTION"

CASTING TO BE MACHINED AFTER WELDING & STRESS RELIEVING. PER 2150.202E102 (W.G. N-103,551)

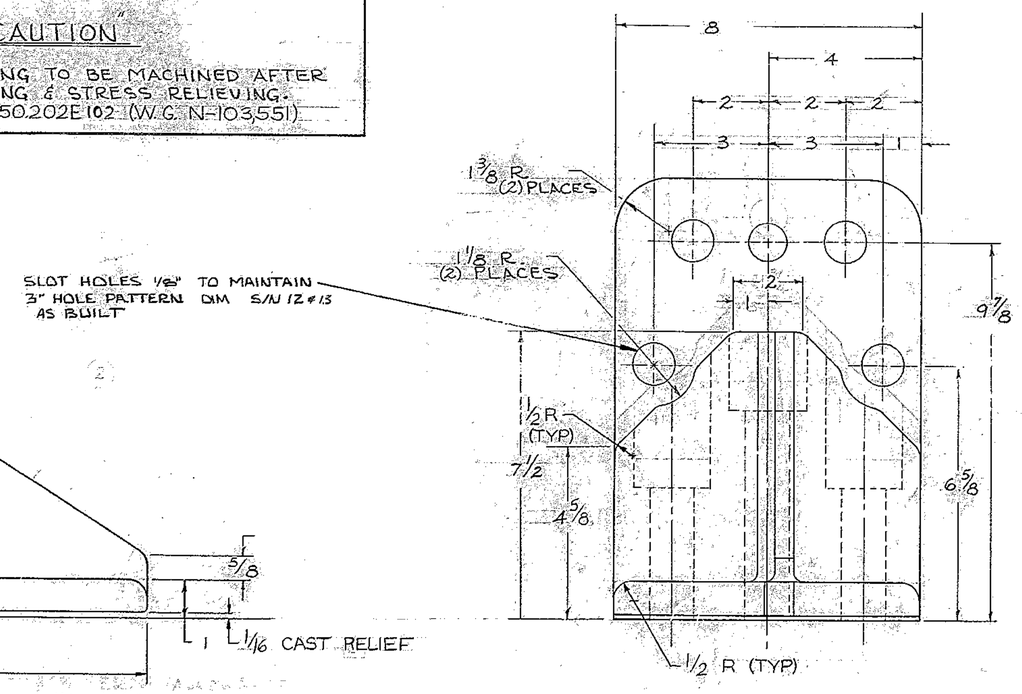

LEFT HAND SHOWN-RIGHT HAND OPPOSITE

NOTES:

1. ALL DIMENSIONS ARE IN INCHES.
2. STEEL CASTING SHALL CONFORM TO ASTM STANDARDS A-27-65 "MILD-TO-MEDIUM-STRENGTH CARBON STEEL CASTING FOR GENERAL APPLICATION." GRADE AS SHOWN.
3. STRESS RELIEVE CASTING BEFORE MACHINING PER W.G.C. SPEC. 510.
4. REAM THIS LENGTH AT ASSY TO FIT BOLTS. ASSEMBLE LEFT & RIGHT HAND TUBE WELDMENTS 2150.202D103 (W.G.E-107,732) & 2150.202D104 (W.G. E-107,736) BEFORE FINAL MACHINING AS A PAIR, AFTER WELDING & STRESS RELIEVING, USING PROPER FITTED BOLTS.
5. STAMP PART NO. 2150.202D105 APPROX. WHERE SHOWN.
6. CASTING RADII 1/8 UNLESS NOTED.

NEXT ASSY: 2150.202D103 & 104 (WG E-107732 & 736)

(REF. TOTAL QTY: 8 LEFT, 8 RIGHT REQ'D)

1164

FIND NO.	PART NO.	DESCRIPTION	QTY	MATERIAL	CODE IDENT

LIST OF MATERIAL (LM)

LIMITS ON MACHINED DIMENSIONS EXCEPT AS NOTED
ANGULAR = ± 1° 0'
LINEAR:
.X = ± .1 .XXX = ± .010
.XX = ± .03 FRACTIONAL = ± 1/32
BREAK ALL SHARP EDGES
MATERIAL
ASTM A-27-65 GR. 65-35

150 IN STELLAR TELESCOPE MOUNTING

DRAWN
CHECK
ENGR [signature] 3/12/67

W.G.E.-107,843
APPROVED

WESTERN GEAR CORPORATION
HEAVY MACHINERY DIVISION
EVERETT, WASHINGTON

CASTING - R.H. & L.H.
RING GIRDER BRACKET
TRUSS - TUBE ASSY

SIZE	CODE IDENT NO.		REV
D	16603	2150-202D105	C

SCALE 1/2 WT LB SHEET 1 OF 1

2150-202D105