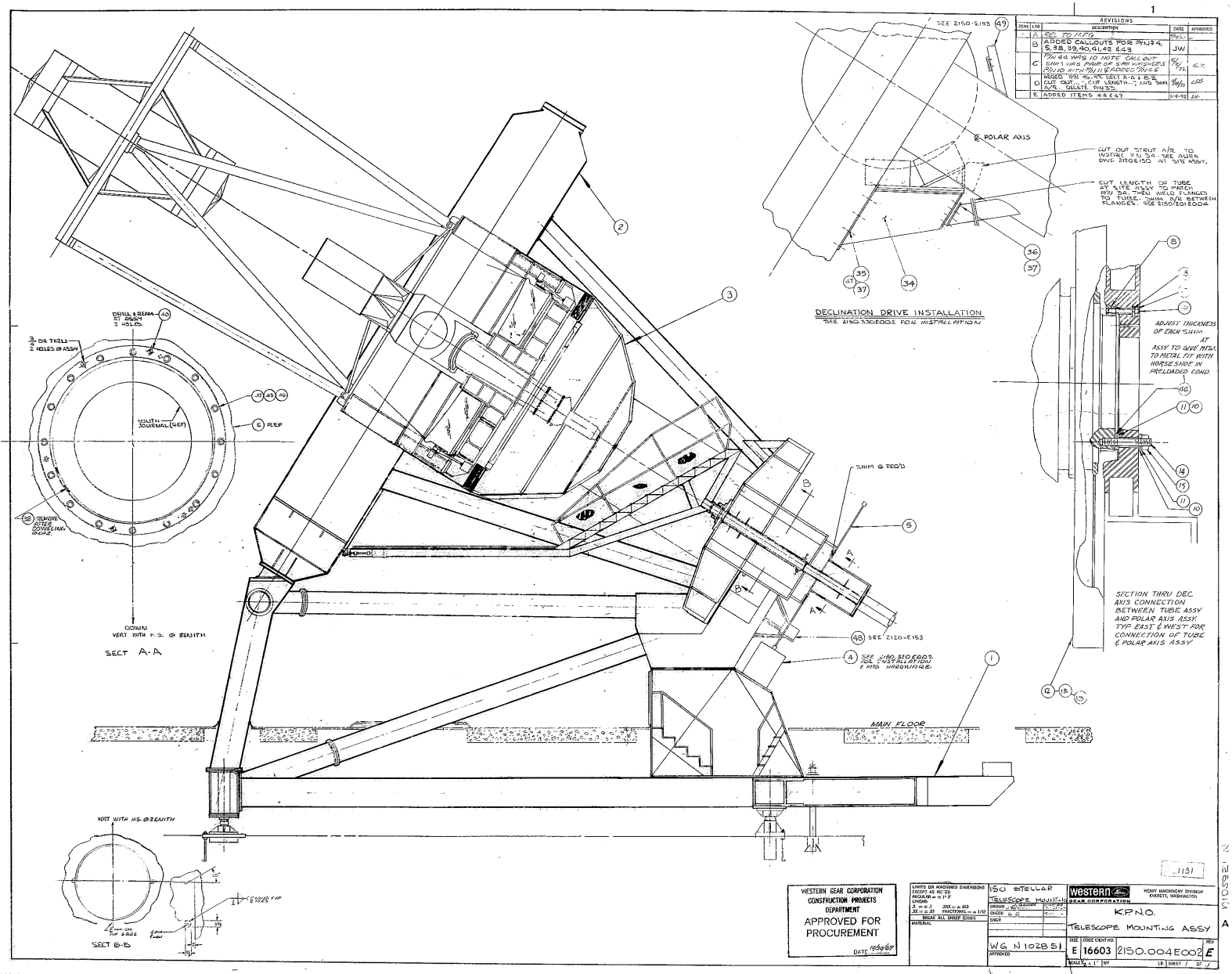REVISIONS				
ZONE	LTR	DESCRIPTION	DATE	APPROVED
-	A	REF. TO TITLE	8/8/72	
	B	ADDED CALLOUTS FOR P/N'S 4, 5, 38, 39, 40, 41, 42 & 43	JW	
	C	P/N 44 WAS TO NOTE CALLOUT SHIM WAS PAIR OF SPH WASHERS 2210 WITH P/N 11 ADDED BY S.E.	8/9/72	G.T.
	D	ADDED P/N 46, 47; SECT A-A & B-B; CUT OUT & CUT LENGTH...; AND SHIM W/E. OBLETE P/N 52.	9/19/72	LDS
	E	ADDED ITEMS 48 & 49	6-6-73	JAF.