REV	DESCRIPTION	DRAWN	DATE
		APPROVED	DATE

BARREL MATING FLANGES
SCALE = NONE

FLANGE "A" B.C. = ø32.750
FLANGE "B" B.C. = ø32.750
FLANGE "C" B.C. = ø31.000

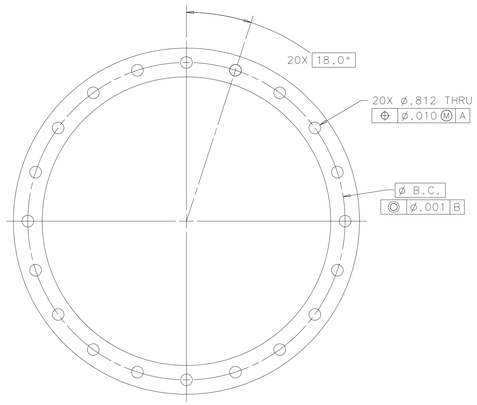

CELL MOUNTING SURFACES
SCALE = NONE

SURFACE "A" B.C. = ø38.583
SURFACE "B" B.C. = ø28.346
SURFACE "C" B.C. = ø24.803

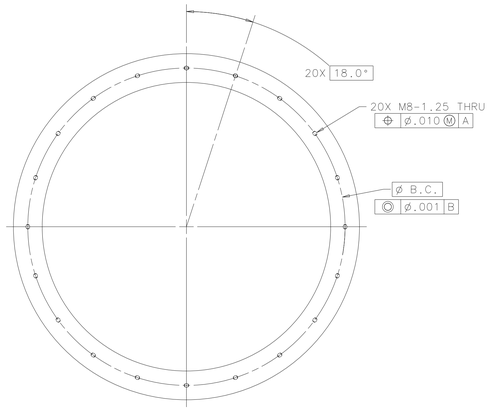

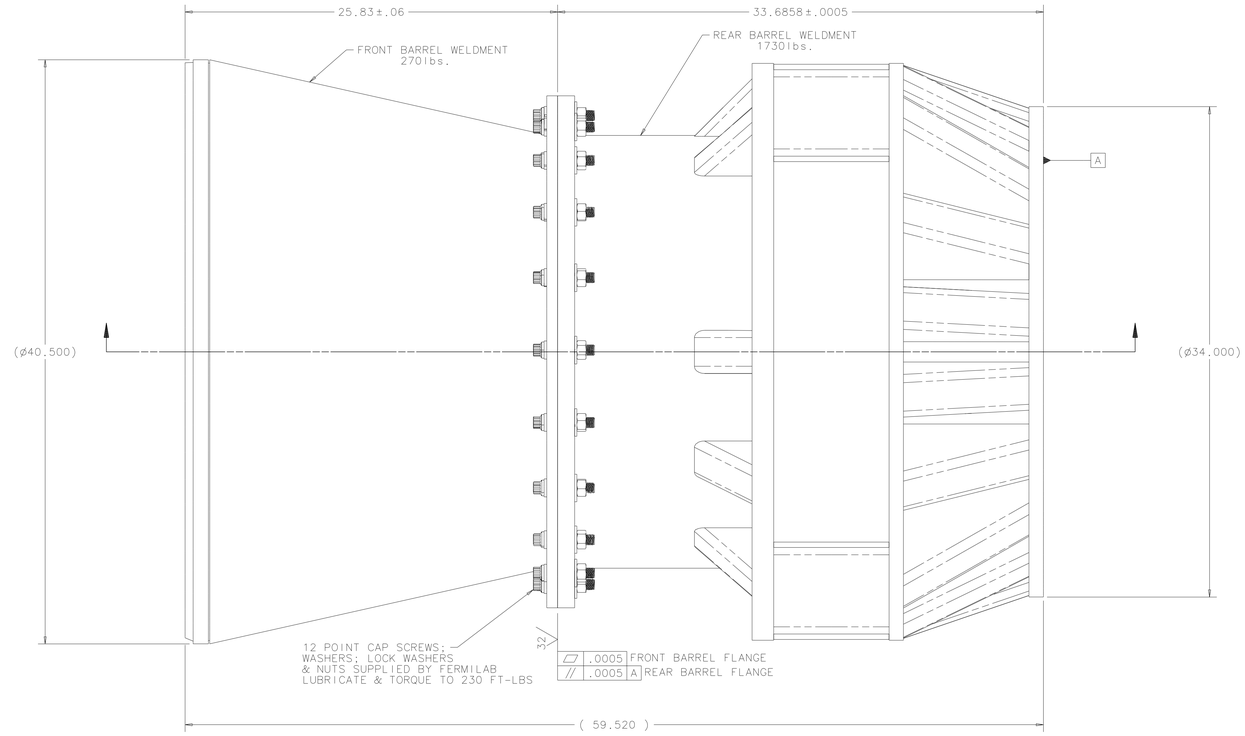

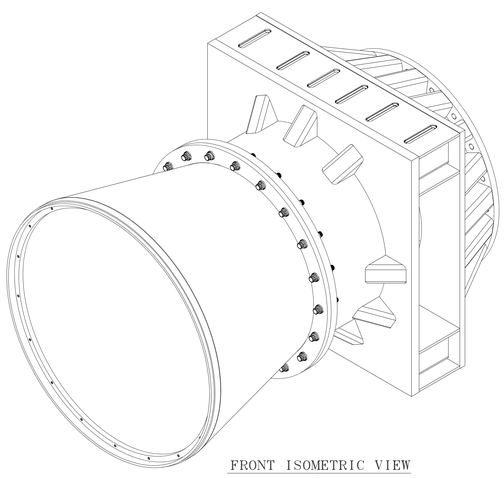

FRONT ISOMETRIC VIEW
SCALE = 1:8

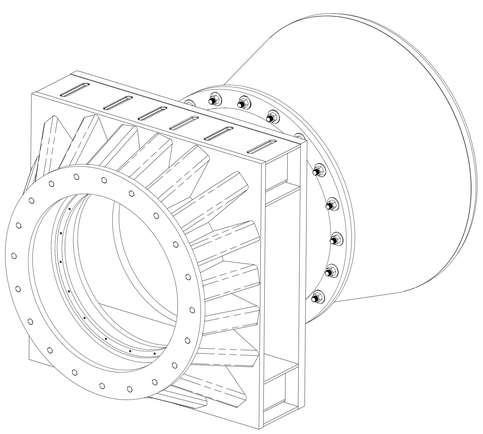

REAR ISOMETRIC VIEW
SCALE = 1:8

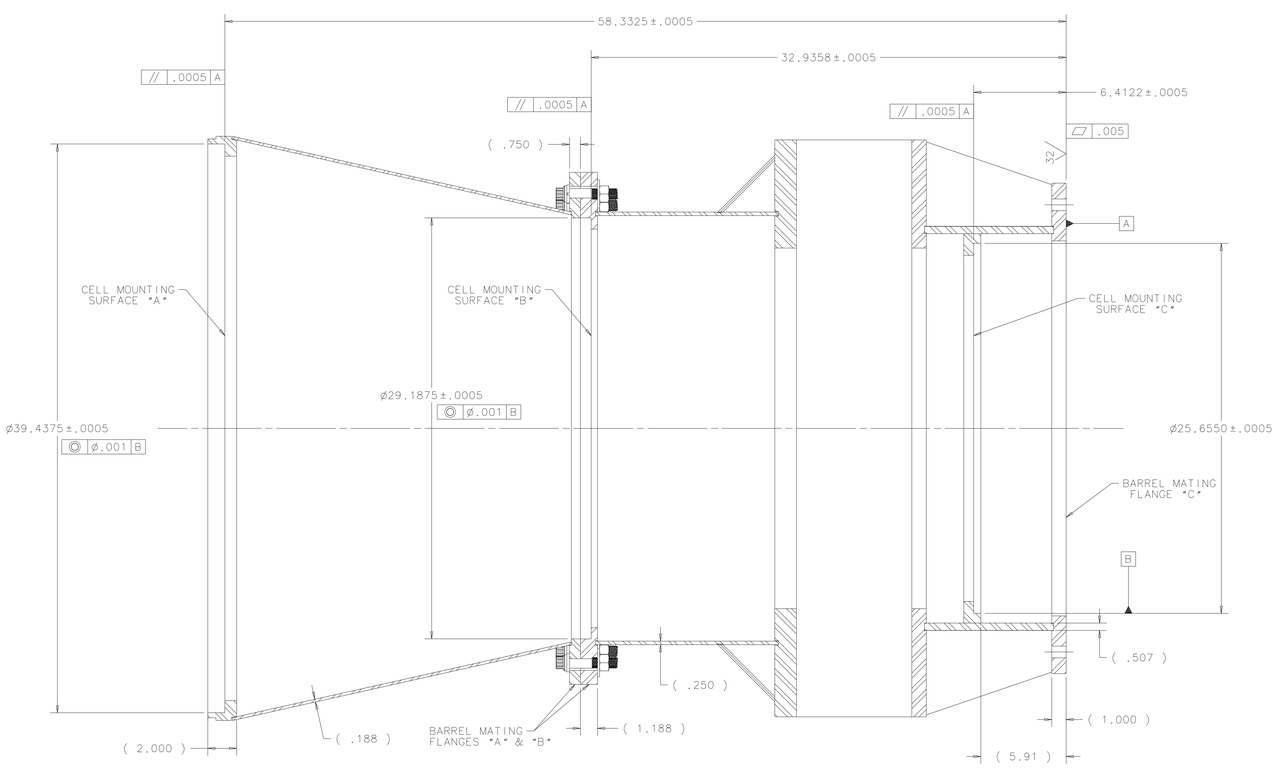

EST. TOTAL WEIGHT: 2,000LBS.

UNLESS OTHERWISE SPECIFIED			ORIGINATOR	A.STEFANIK	21-APR-2006
.XX	.XXX	ANGLES	DRAWN	C.GRIMM	21-APR-2006
± ••	± .010	± ••	CHECKED		
1. BREAK ALL SHARP EDGES .015 MAX. 2. DO NOT SCALE DRAWING. 3. DIMENSIONS BASED UPON ASME Y14.5M-1994. 4. MAX. ALL MACH. SURFACES 63 √ 5. DRAWING UNITS: U.S.INCH			APPROVED		
			USED ON		
			MATERIAL FRONT SECTION AND REAR SECTION A36 HOT ROLLED; WELDMENTS SUPPLIED BY FNAL		

FERMI NATIONAL ACCELERATOR LABORATORY
UNITED STATES DEPARTMENT OF ENERGY

CTIO BLANCO DECAM
P5 CORRECTOR-CAMERA ASSEMBLY
P5 CORRECTOR BARREL MACHINING

SCALE	DRAWING NUMBER	SHEET	REV
.25 & AS NOTED	4900.123-ME-436208	1 OF 1	

CREATED WITH : Ideas11NXSeries | GROUP: PPD/MECHANICAL DEPARTMENT